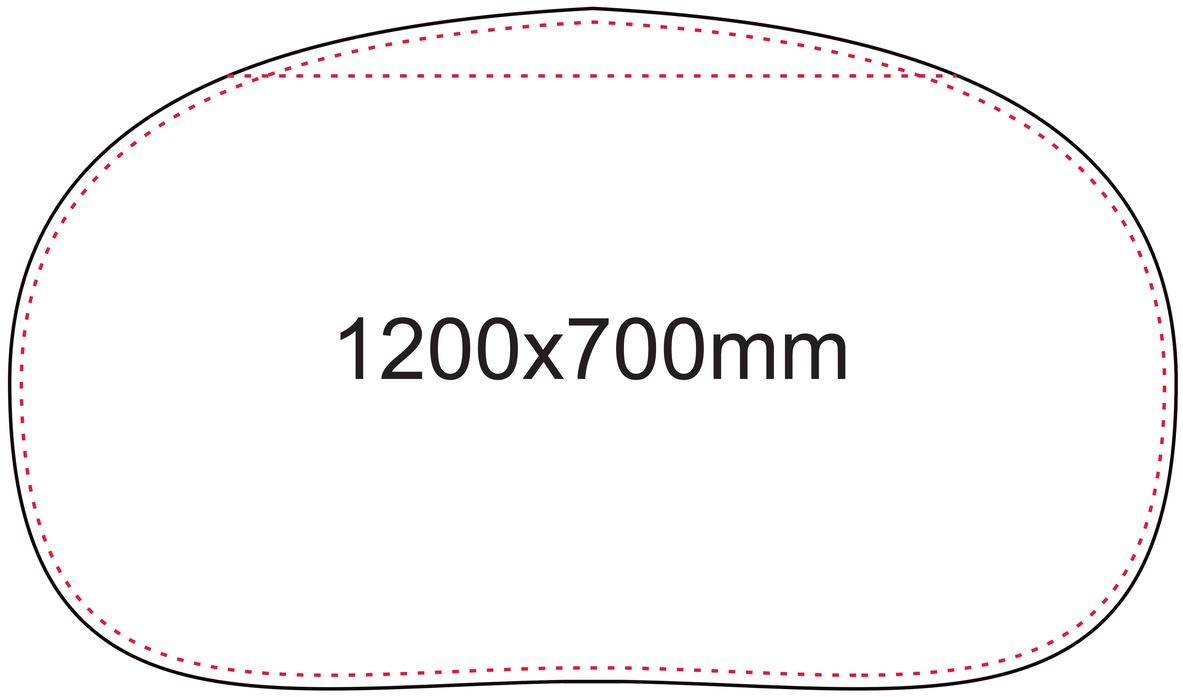
1200x700mm

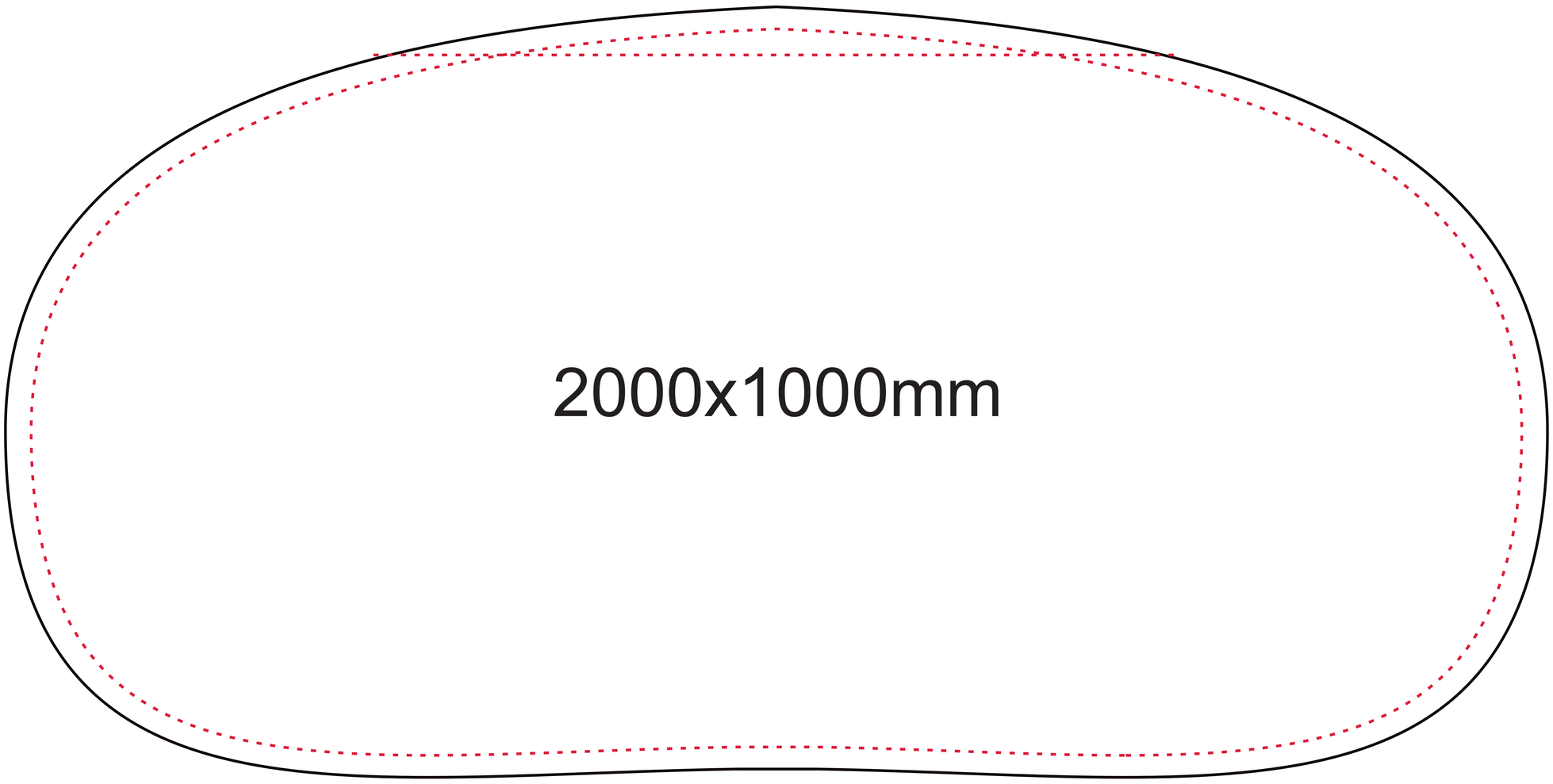
2000x1000mm

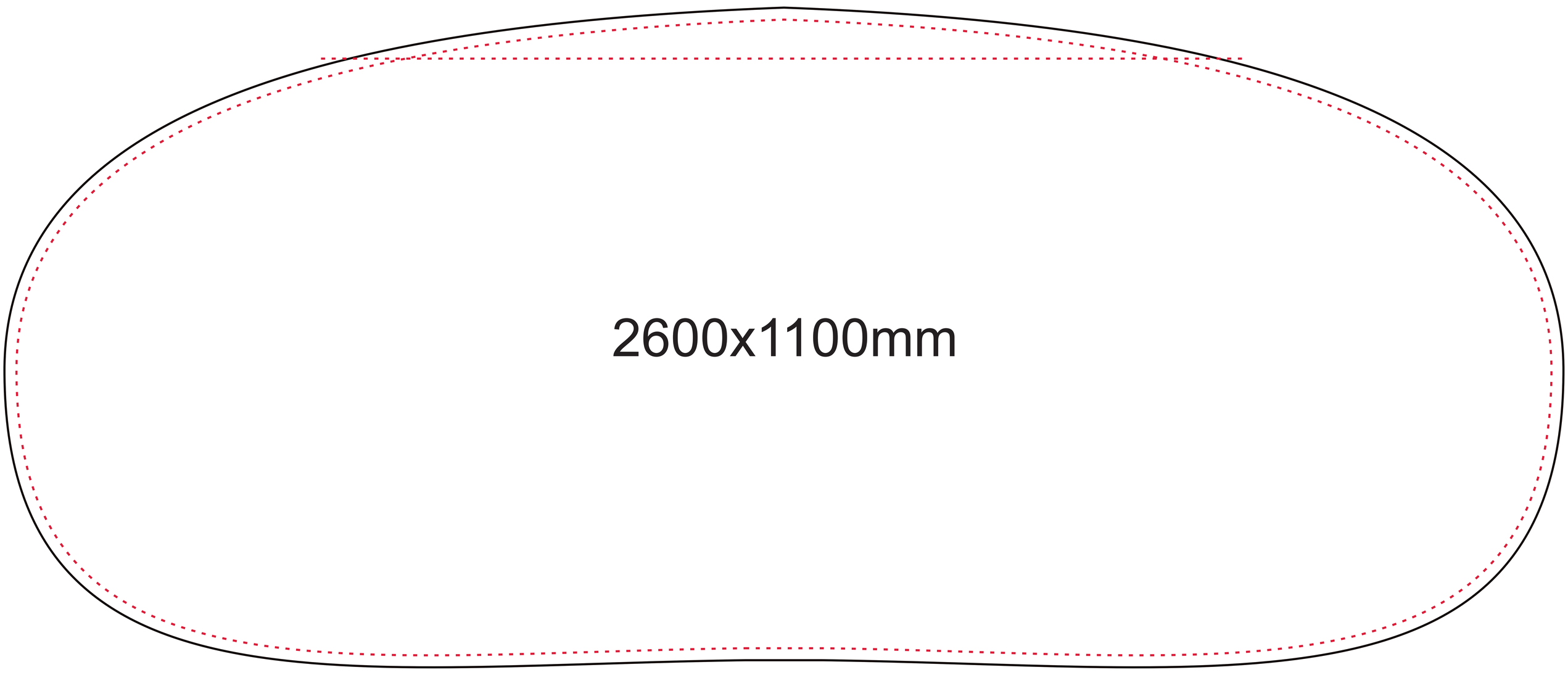
2600x1100mm